MISCELLANEOUS SPECIFICATIONS

Table of Figures

Figure C-1 Expanded Trash Rack ..... C – 2
Figure C-2 Trash Rack Detail..... C – 3
Figure C-3 Typical Sediment Forebay Plan and Section..... C – 4
Figure C-4 Typical Sediment Forebay Alternate Sections..... C – 5
Figure C-5 Isolation / Diversion Structure ..... C – 6
Figure C-6 Concrete Level Spreader ..... C – 7

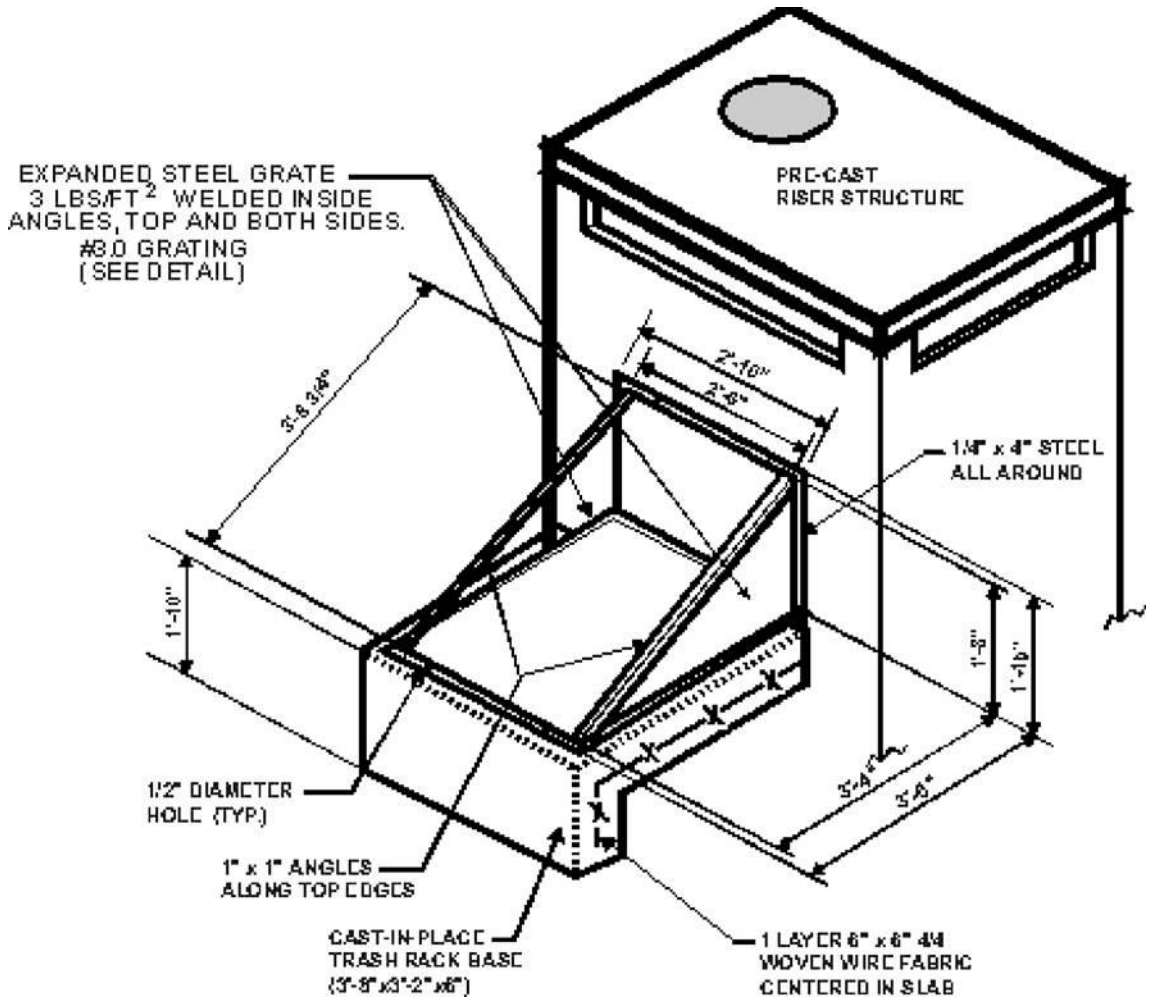

Figure C-1 Expanded Trash Rack

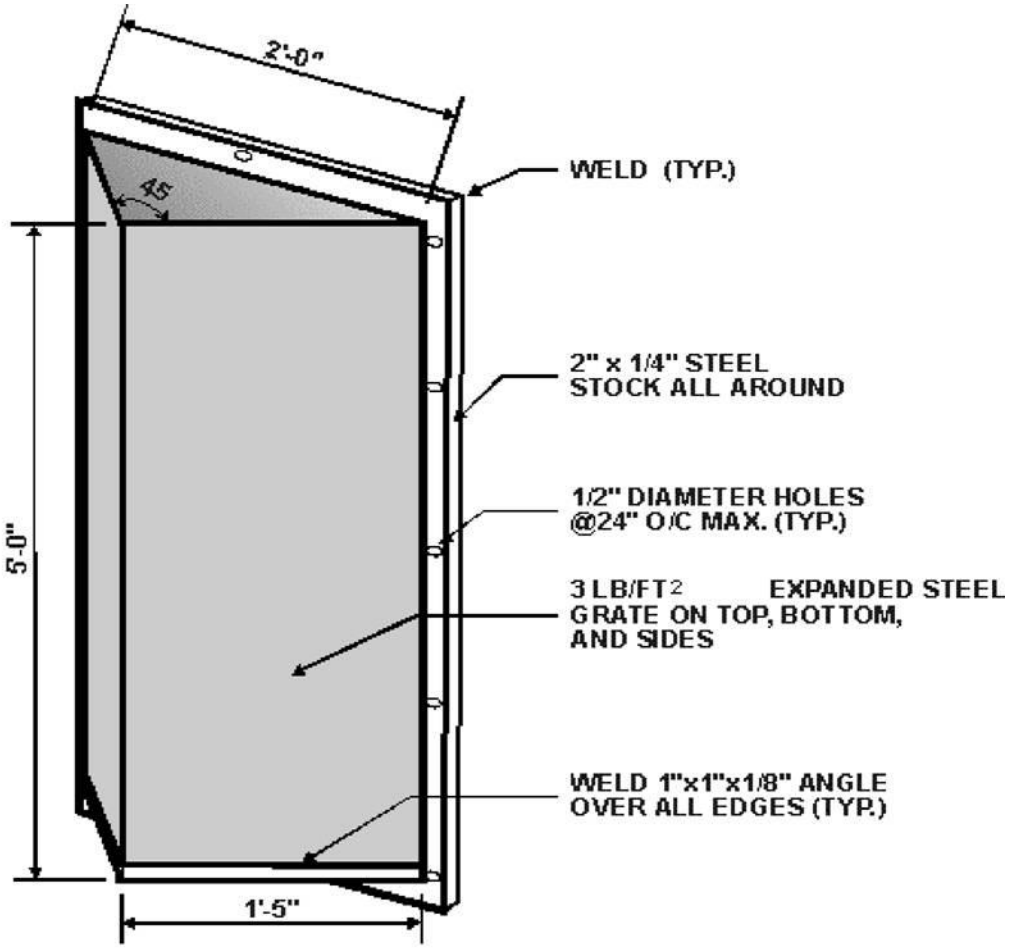

NOTES FOR TRASH RACK

1. TRASH RACK TO BE CENTERED OVER OPENING.
2. STEEL TO CONFORM TO ASTM A-36.
3. ALL SURFACES TO BE COATED WITH ZRC COLD GALVANIZING COMPOUND AFTER WELDING.
4. TRASH RACK TO BE FASTENED TO THE WALL WITH 1/2" MASONRY ANCHORS. TRASH RACK TO BE REMOVABLE.

Figure C-2 Trash Rack Detail

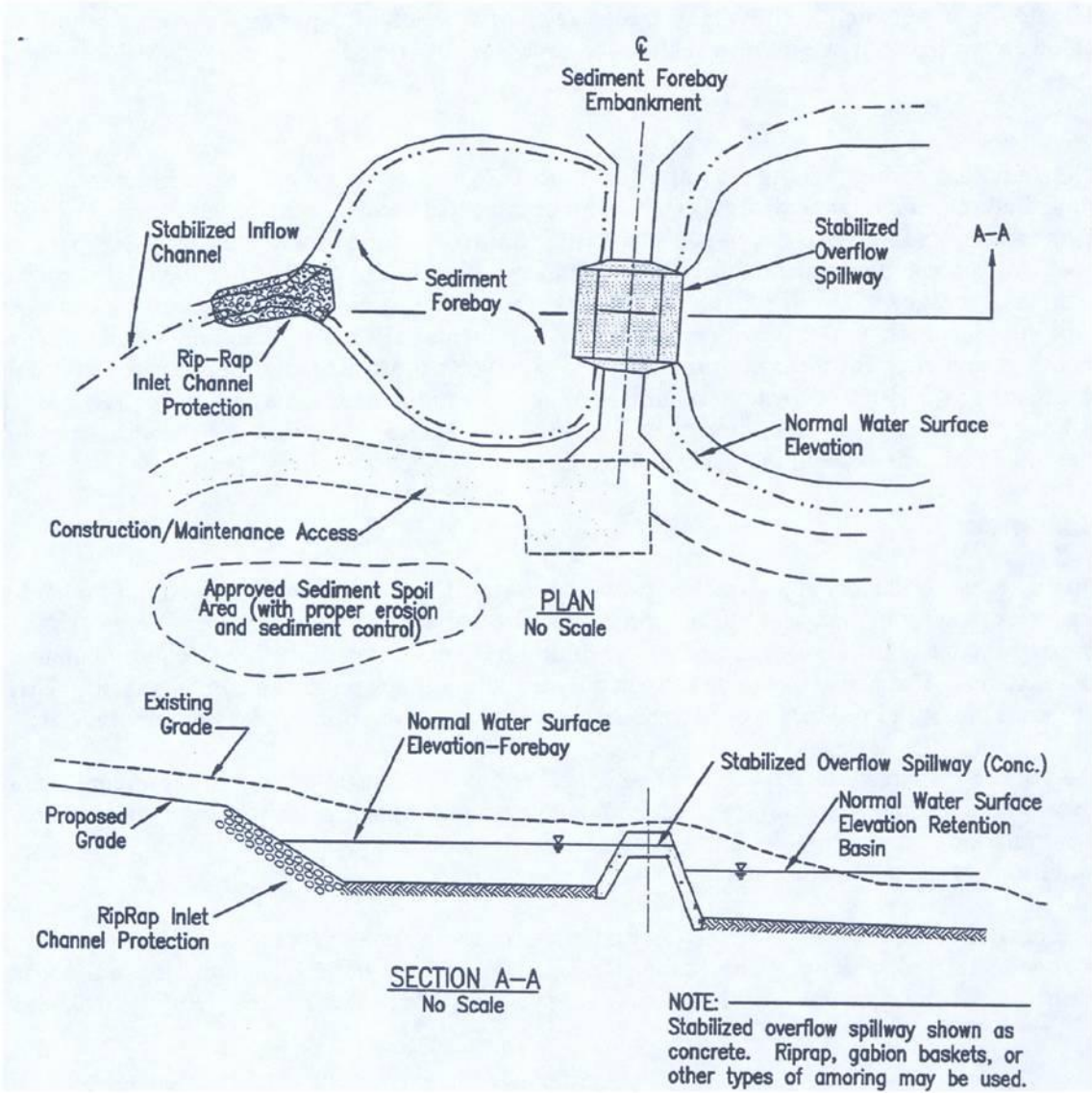

Figure C-3 Typical Sediment Forebay Plan and Section

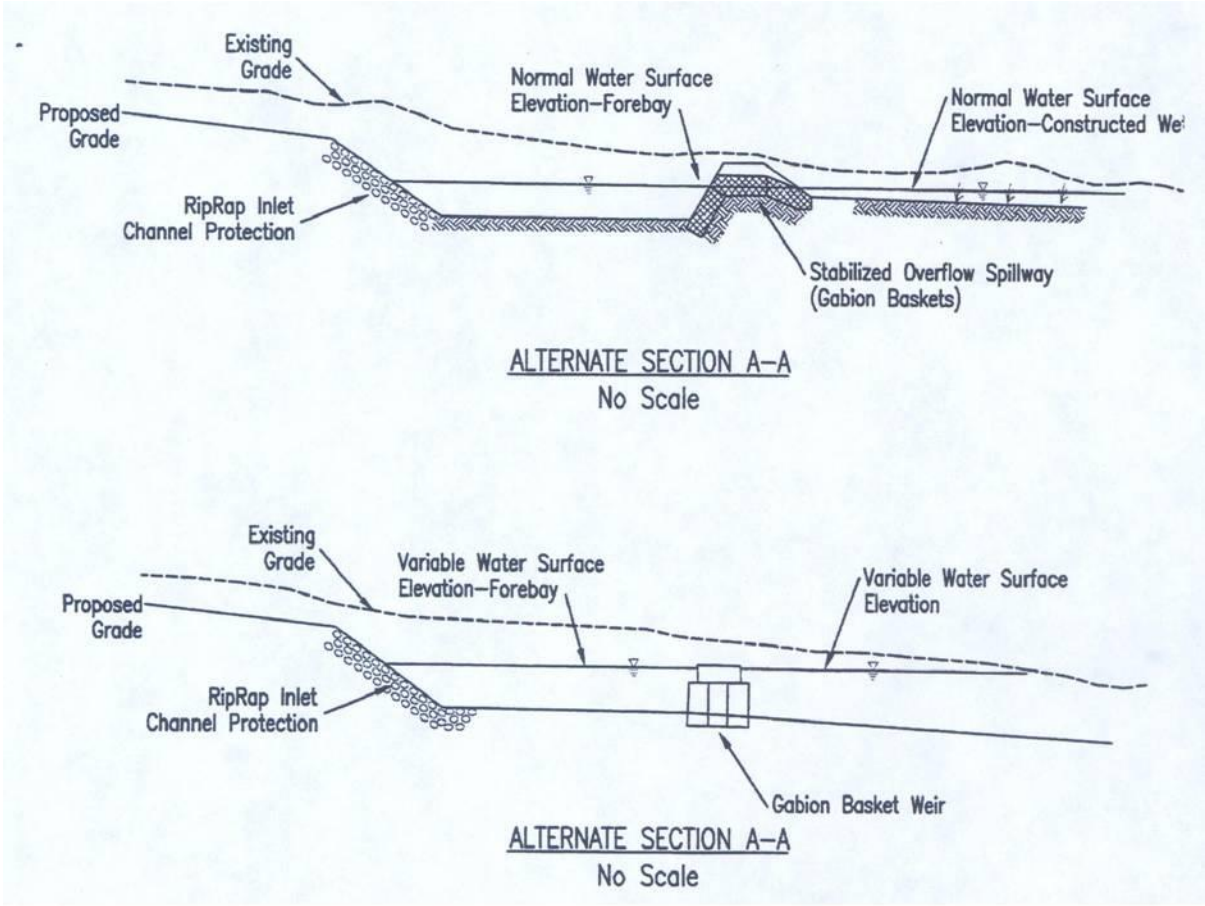

Figure C-4 Typical Sediment Forebay Alternative Sections

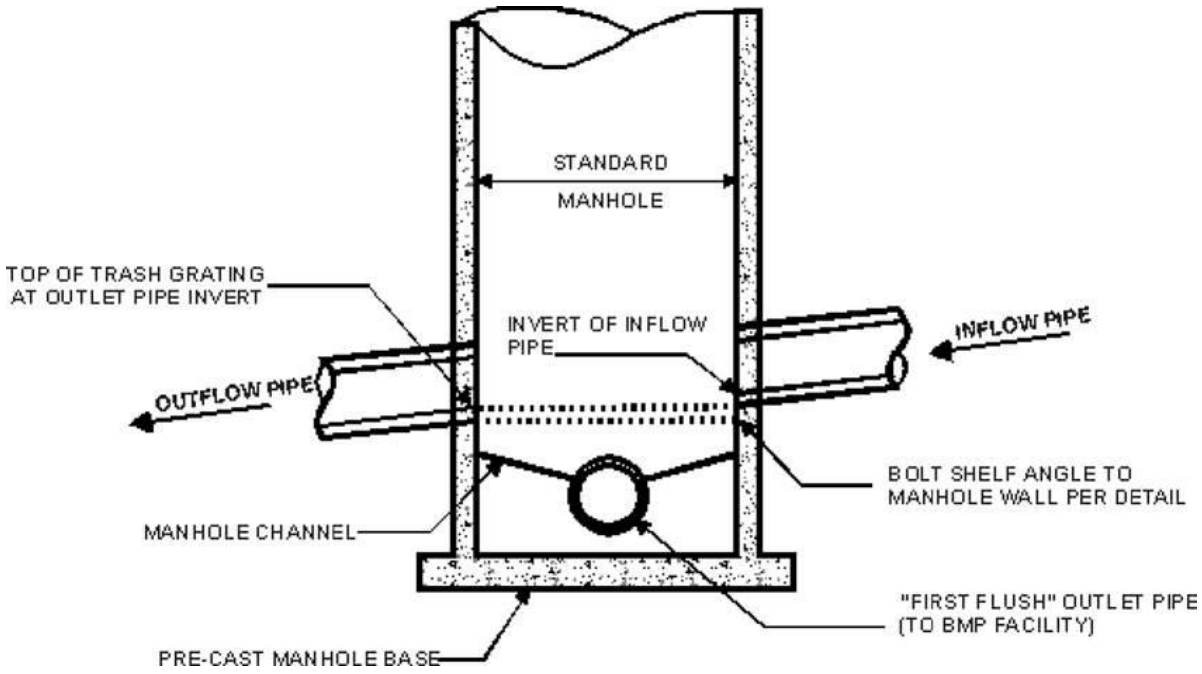

Note: Aluminum Trash Grate in Two Semicircular Sections

Figure C-5 Diversion Structure

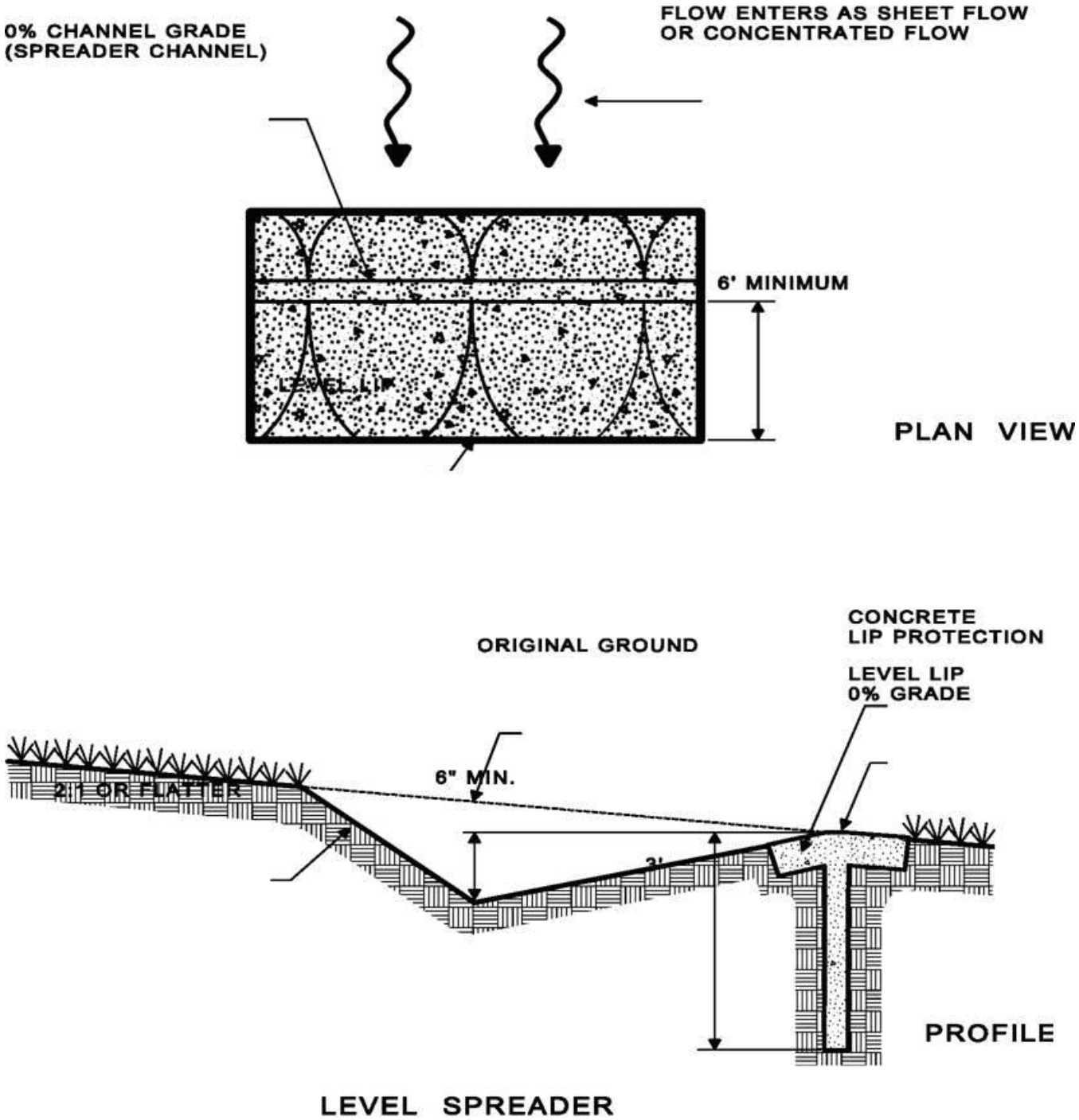

Source: Virginia Erosion and Sediment Control Handbook, Virginia Soil and Water Conservation Commission, 1980

Figure C-6 Concrete Level Spreader

This page left intentionally blank.